WSS Elevated Mounting System

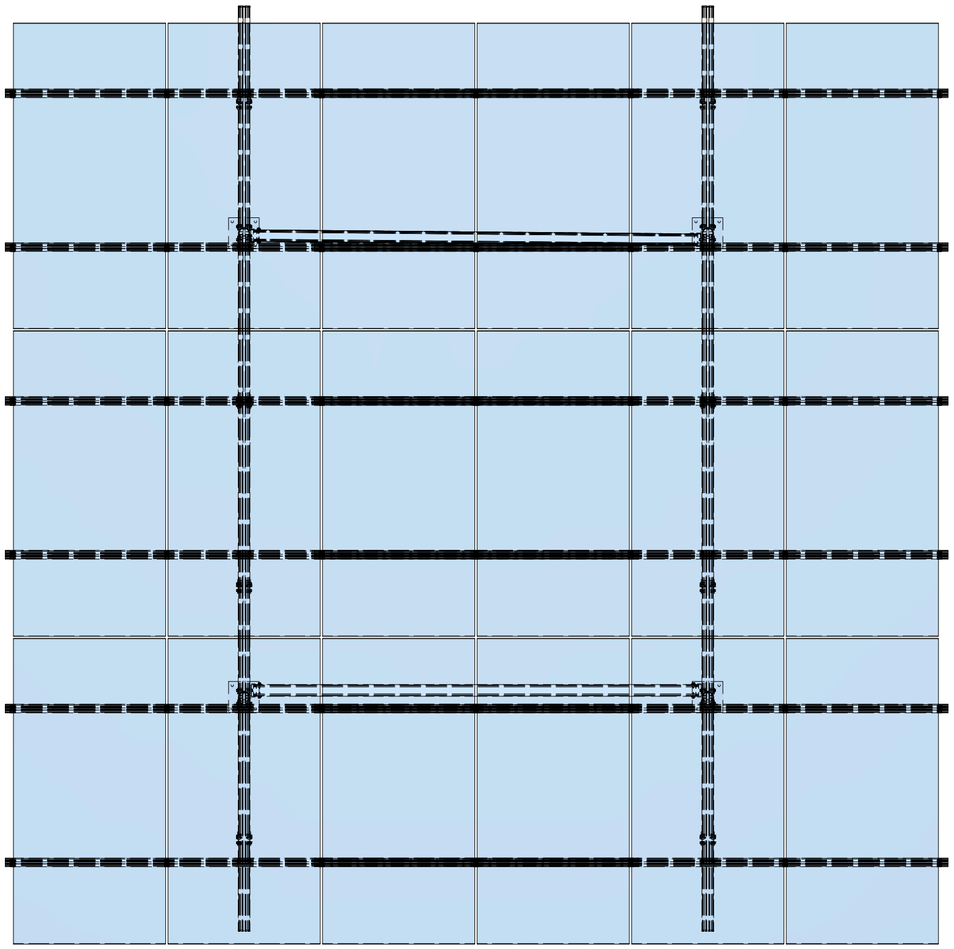

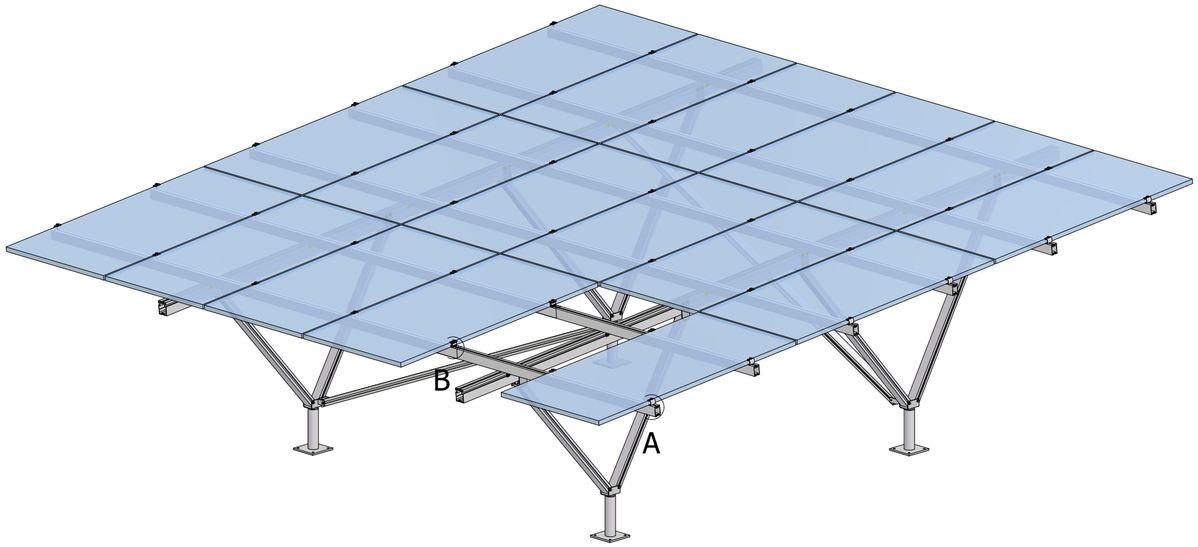

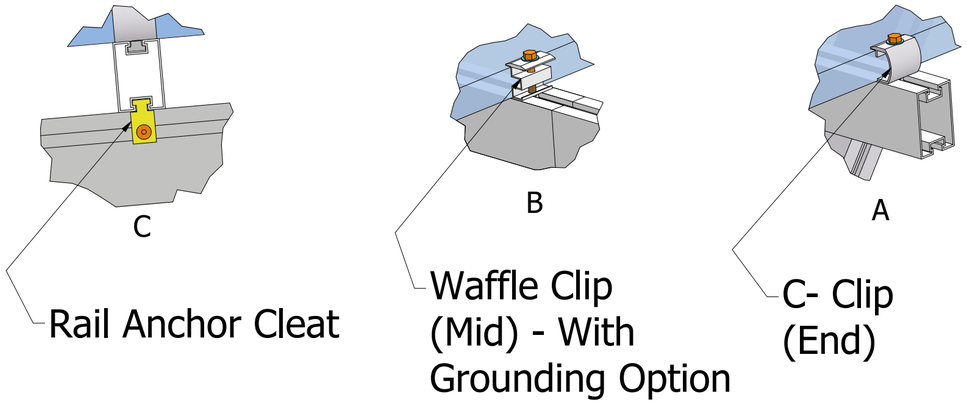

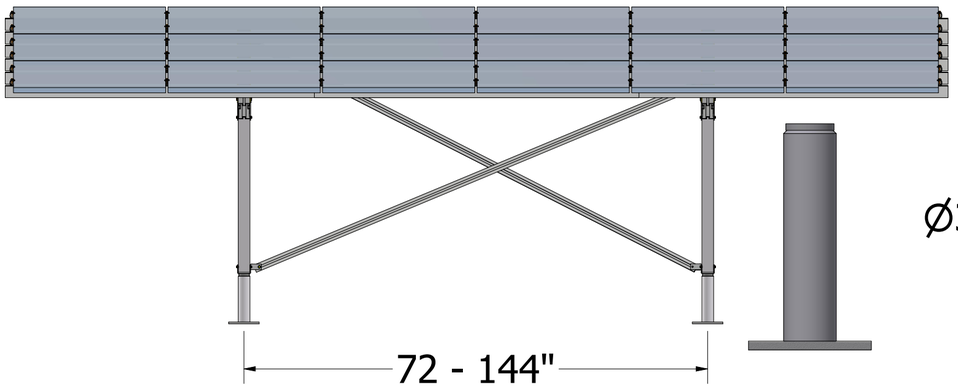

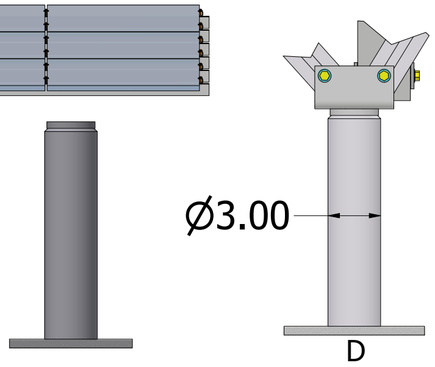

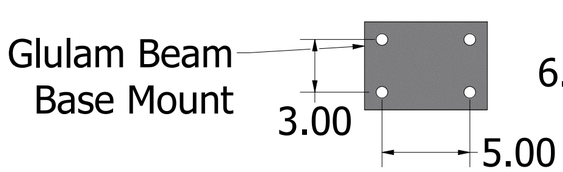

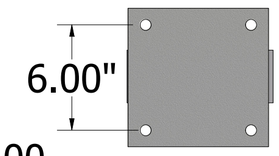

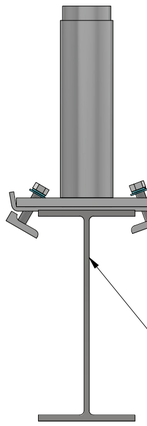

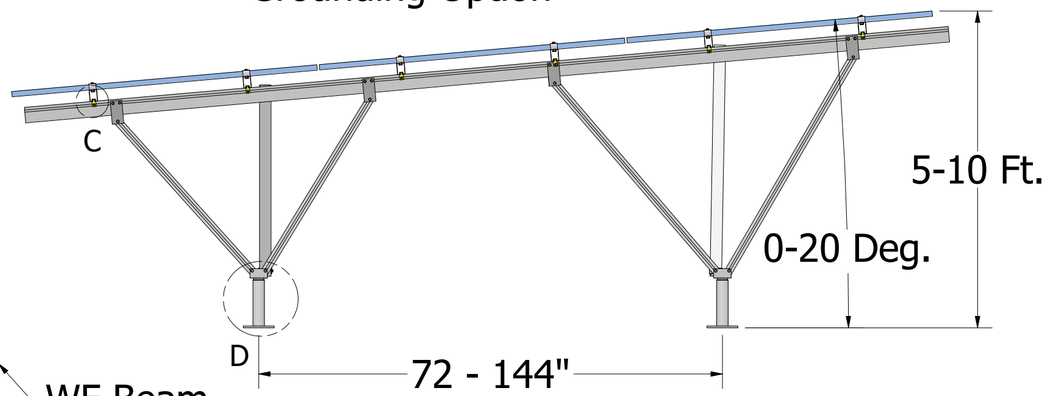

ISA CORP
www.isa-corporation.com
3213 Whipple Road
Union City CA 94587
510-324-3755